| | | | |
|---|---|---|---|
| Program Name | **B.C.A** | Semester | **VI** |
| Course Title | **Fundamentals of Data Science (Theory)** | | |
| Course Code: | **DSE-E2** | No. of Credits | **03** |
| Contact hours | **42 Hours** | Duration of SEA/Exam | **2 1/2 Hours** |
| Formative Assessment Marks | **40** | Summative Assessment Marks | **60** |

**Course Outcomes (COs):** After the successful completion of the course, the student will be able to:

| | |
|---|---|
| CO1 | Understand the concepts of data and pre-processing of data. |
| CO2 | Know simple pattern recognition methods |
| CO3 | Understand the basic concepts of Clustering and Classification |
| CO4 | Know the recent trends in Data Science |

| **Contents** | **42 Hrs** |
|---|---|
| **Unit I: Data Mining:** Introduction, Data Mining Definitions, Knowledge Discovery in Databases (KDD) Vs Data Mining, DBMS Vs Data Mining, DM techniques, Problems,Issues and Challenges in DM, DM applications. | **8** |
| **Data Warehouse:** Introduction, Definition, Multidimensional Data Model, Data Cleaning, Data Integration and transformation, Data reduction, Discretization | **8** |
| **Mining Frequent Patterns:** Basic Concept – Frequent Item Set Mining Methods - Aprioriand Frequent Pattern Growth (FPGrowth) algorithms -Mining Association Rules | **8** |
| **Classification:** Basic Concepts, Issues, Algorithms: Decision Tree Induction. Bayes Classification Methods, Rule-Based Classification, Lazy Learners (or Learning from yourNeighbors), k Nearest Neighbor. Prediction - Accuracy- Precision and Recall | **10** |
| **Clustering:** Cluster Analysis, Partitioning Methods, Hierarchical Methods, Density-Based Methods, Grid-Based Methods, Evaluation of Clustering | **8** |

**Unit 5**

**Topics:**

**Clustering: Cluster Analysis, Partitioning Methods, Hierarchical Methods, Density-Based Methods, Grid-Based Methods, Evaluation of Clustering.**

## Cluster Analysis

Cluster analysis or clustering is the process of grouping a set of data objects (or observations) into subsets. Each subset is a cluster, such that objects in a cluster are similar to one another, yet dissimilar to objects in other clusters.

Clustering is also known as unsupervised learning since groups are made without the knowledge of class labels.

Clustering is also called data segmentation in some applications because clustering partitions large data sets into groups according to their similarity.
Ex: grouping customers into different groups by discovering.

Clustering can also be used for outlier detection, where outliers (values that are “far away” from any cluster) may be more interesting than common cases.

## Clustering has many applications in different industries, including:

- **Market segmentation:** Categorizing customers into groups like "frequent buyers" or "occasional buyers"
- **Social network analysis:** Identifying online user communities for targeted advertising campaigns
- **Recommendation engines:** Grouping users with similar preferences and viewing habits
- **Image segmentation:** Grouping pixels that correspond to different tissue types
- **Medical imaging:** Grouping patients based on similar genetic traits or symptoms to help with disease diagnosis and treatment customization
- **Search result grouping:** Matching similar search queries
- **Anomaly detection:** Identifying anomalies

**Requirements for cluster Analysis**

The following are typical requirement of clustering in data mining:

- **Scalability:** A large dataset consists of millions of objects. Clustering on only a sample of a given large data set may lead to biased results. Therefore, highly scalable clustering algorithms are needed.
- **Ability to deal with different types of attributes:** Clustering algorithm which can work on all kind of data like internal based, binary, categorical, graphs, image, documents etc are needed.
- **Discovery of cluster with arbitrary shapes:** Cluster with arbitrary shapes are often required in real time scenarios.
- **Requirements for domain knowledge to determine input parameters:** Algorithm which requires min input/domain knowledge about the data in required for clustering complex data.
- **Ability to deal with noisy data:** Algorithms which are robust to noise is required.
- **Incremental clustering and insensitivity to input order:** Algorithms that can input additional data after given results and hence form update cluster are needed.
- **Capable of clustering high dimensional data:** Finding clusters of data objects in a high dimensional is a critical requirement.

**Basic Clustering Methods.**

1. **Partitioning methods:** Partitioning method construct K partition of the data, where each partition represents a cluster. It groups similar data points into clusters based on their similarities and differences.

E.g., K-Means, K-Medoids, FCMA, CLARA.

2. **Hierarchical methods:** Hierarchical methods creates a hierarchical decomposition of the given set of data objects. E.g, BIRCH, CHAMELEON.

   There are two approaches for hierarchical clustering:

   1. **Agglomerative approach:** It is also called as bottom up approach. Here initially each object forms a separated group and then successively merges other/group closest to it until all groups are merged into one. E.g., AGNES (Agglomeíative Nesting)
   2. **Divisive approach:** It is also called as top-down approach. Here all objects are merged as one group initially and then successively split into smaller cluster until each object is one cluster. E.g., DIANA, or Divisive ANAlysis
   3. **Density based methods:** Partitioning and hierarchical methods are designed to find spherical-shaped clusters. They have difficulty finding clusters of arbitrary shape such as the "S" shape and oval clusters. To find clusters of arbitrary shape, alternatively, we can model clusters as dense regions in the data space, separated by sparse regions. This is the main strategy behind density-based clustering methods, which can discover clusters of nonspherical shape. Here a cluster is grown as long on density ( no. of objects) in the neighborhood exceeds some threshold. It groups similar data points in a dataset based on their density. The algorithm identifies core points with a minimum

number of neighboring points within a specified distance (known as the epsilon radius). It expands clusters by connecting these core points to their neighboring points until the density falls below a certain threshold. Points that do not include any cluster are considered outliers or noise.

E.g., DBSCAN, OPTICS, DENCLUE, Mean-Shift.

4. **Grid -based method:** Here data objects are first formed as grid (cells) and then clustering operations are performed on this grid. The object space is divided into a grid structure of finite cells, and clustering operations are performed on the cells instead of individual data points. This method is highly efficient for handling spatial data and has a fast processing time that is independent of the number of data objects.

   E.g., Statistical Information Grid(STING), CLIQUE, ENCLUS

**Overview of Clustering Methods:**

| Method | General Characteristics |
|---|---|
| Partitioning methods | – Find mutually exclusive clusters of spherical shape<br>– Distance-based<br>– May use mean or medoid (etc.) to represent cluster center<br>– Effective for small- to medium-size data sets |
| Hierarchical methods | – Clustering is a hierarchical decomposition (i.e., multiple levels)<br>– Cannot correct erroneous merges or splits<br>– May incorporate other techniques like microclustering or consider object "linkages" |
| Density-based methods | – Can find arbitrarily shaped clusters<br>– Clusters are dense regions of objects in space that are separated by low-density regions<br>– Cluster density: Each point must have a minimum number of points within its "neighborhood"<br>– May filter out outliers |
| Grid-based methods | – Use a multiresolution grid data structure<br>– Fast processing time (typically independent of the number of data objects, yet dependent on grid size) |

**Partitioning Methods:** The simplest and most fundamental version of cluster analysis is partitioning, which groups similar data points into clusters based on their similarities and differences.
E.g, . K-means and K-medoids.

**K Means Algorithm:**

- First, it randomly selects K of the object in D and this will be the Mean/Center considered
- For each iteration an object is assigned to it which is near based on Euclidean distance and the mean/center is updated
- The iteration continues till last iteration cluster and current iteration cluster are same.

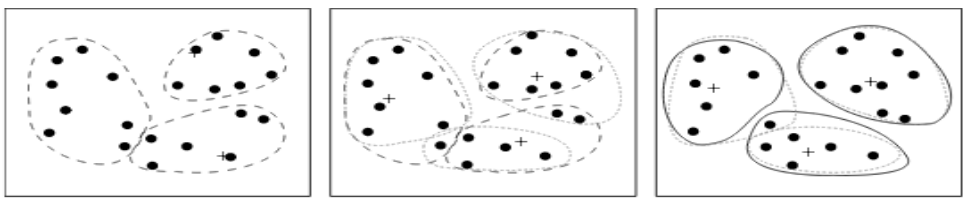

(a) Initial clustering (b) Iterate (c) Final clustering

Clustering of a set of objects using the *k*-means method; for (b) update cluster centers and reassign objects accordingly (the mean of each cluster is marked by a +).

**Algorithm: *k*-means.** The *k*-means algorithm for partitioning, where each cluster's center is represented by the mean value of the objects in the cluster.

**Input:**

- *k*: the number of clusters,
- *D*: a data set containing *n* objects.

**Output:** A set of *k* clusters.

**Method:**

(1) arbitrarily choose *k* objects from *D* as the initial cluster centers;
(2) **repeat**
(3) (re)assign each object to the cluster to which the object is the most similar, based on the mean value of the objects in the cluster;
(4) update the cluster means, that is, calculate the mean value of the objects for each cluster;
(5) **until** no change;

**Advantages of k-means:**

- Relatively simple to implement.
- Can be used for large data sets
- Guarantees convergence.

**Disadvantages of k-means:**

- It is a bit difficult to predict the number of clusters i.e. the value of k.
- Output is strongly impacted by initial inputs like number of clusters (value of k).

**K – Medoids Algorithm(Partitioning Around Medoids (PAM)):**

It is an improvised version of the K-Means algorithm mainly designed to deal with outlier data sensitivity. Instead of taking the mean value to represent the cluster. A Medoid is a point in the cluster from which dissimilarities with all the other points in the clusters are minimal. A representative object (Oi) is chosen randomly for representing the cluster. Each remaining object is assigned to the cluster of which the representative object is the most similar. The partitioning method is then performed based on the principle of minimizing the sum of the dissimilarity between each objects ' P ' and its corresponding representative objects.

**Algorithm:** ***k*-medoids.** PAM, a *k*-medoids algorithm for partitioning based on medoid or central objects.

**Input:**

- *k*: the number of clusters,
- *D*: a data set containing *n* objects.

**Output:** A set of *k* clusters.

**Method:**

(1) arbitrarily choose *k* objects in *D* as the initial representative objects or seeds;
(2) **repeat**
(3) assign each remaining object to the cluster with the nearest representative object;
(4) randomly select a nonrepresentative object, $o_{random}$;
(5) compute the total cost, *S*, of swapping representative object, $o_j$, with $o_{random}$;
(6) **if** $S < 0$ **then** swap $o_j$ with $o_{random}$ to form the new set of *k* representative objects;
(7) **until** no change;

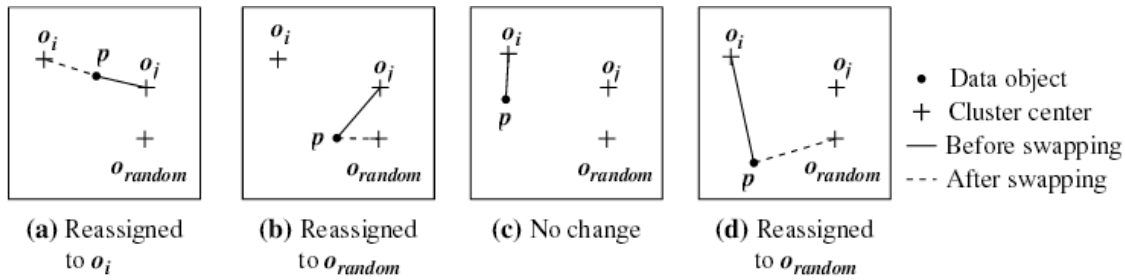


Four cases of the cost function for $k$-medoids clustering.

**Advantages of using K-Medoids:**

- Deals with noise and outlier data effectively
- Easily implementable and simple to understand
- Faster compared to other partitioning algorithms

**Disadvantages:**

- Not suitable for Clustering arbitrarily shaped groups of data points.
- As the initial medoids are chosen randomly, the results might vary based on the choice in different runs.

**Hierarchical Methods**

Partitioning Methods partitions objects into exclusive group. In some situation we may want data formed into groups in different levels A hierarchical clustering method works by grouping data objects into a hierarchy or 'tree' of clusters. This helps in summarizing the data with the help of hierarchy.

Hierarchical methods can be categorized as:

a) Algorithmic methods,

b) Probabilistic methods and

c) Bayesian methods

Agglomerative, divisive and multiphase method are algorithmic meaning they consider data objects as deterministic and compute clusters accordingly to the deterministic distance between objects. Probabilistic methods use probabilistic models to compare clusters and measure the quality of clusters by the firmness of models. Bayesian Methods compute a distribution of possible clustering. That is, instead of outputting a single deterministic clustering over a data set, they return a group of clustering structures and their probabilities, conditional on the given data.

**AGNES (AGglomerative NESting), an agglomerative hierarchical clustering method and DIANA (DIvisive ANAlysis), a divisive hierarchical clustering method:**

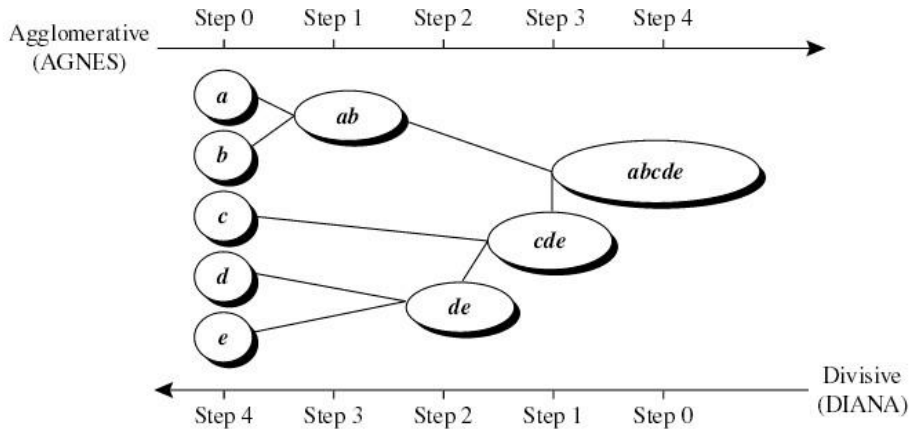


Agglomerative and divisive hierarchical clustering on data objects $\{a, b, c, d, e\}$.

Figure shows the application of AGNES (AGglomerative NESting), an agglomerative hierarchical clustering method (Top arrow) , and DIANA (DIvisive Analysis), a divisive hierarchical clustering method(Bottom arrow), on a data set of five objects, {a, b, c, d, e}.

**Working of AGNES:**

- Initially, AGNES, the agglomerative method, places each object into a cluster of its own.
- The clusters are then merged step-by-step according to some criterion. For example, clusters C1 and C2 may be merged if an object in C1 and an object in C2 form the minimum Euclidean distance between any two objects from different clusters. This is a single-linkage approach in that each cluster is represented by all the objects in the cluster, and the similarity between two clusters is measured by the similarity of the closest pair of data points belonging to different clusters.
- The cluster-merging process repeats until all the objects are eventually merged to form one cluster.

**Working of DIANA:**

- All the objects are used to form one initial cluster.
- The cluster is split according to some principle such as the maximum Euclidean distance between the closest neighboring objects in the cluster.
- The cluster-splitting process repeats until, eventually, each new cluster contains only a single object.

**Dendrogram:**
A tree structure called a dendrogram is commonly used to represent the process of hierarchical clustering. Dendrogram is used as a plot to show the results of hierarchical clustering method graphically.

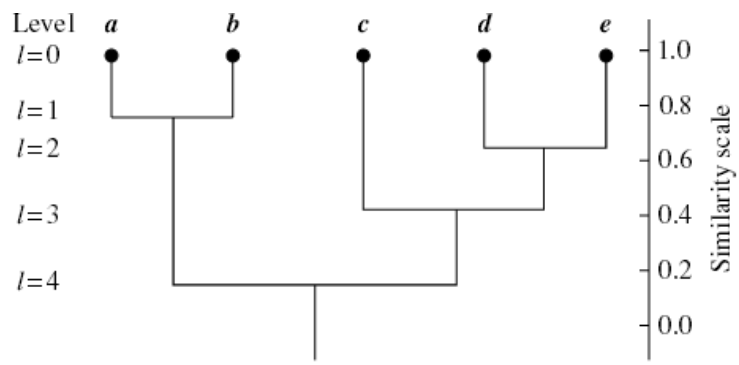


Dendrogram representation for hierarchical clustering of data objects $\{a, b, c, d, e\}$.

**Distance Measuring in Algorithmic Methods**

Whether using an agglomerative method or a divisive method, a core need is to measure the distance between two clusters. Four widely used measures for distance between clusters are as follows, where |p-p'| is the distance between two objects.

**1 Minimum distance:**

$$Dist_{min}(Ci,Cj) = \min \{ |P - P'|\} \quad P \in Ci, P' \in Cj$$

**2 Maximum distance:**

$$Dist_{max}(Ci,Cj) = \max \{ |P - P'|\} \quad P \in Ci, P' \in Cj$$

**3 Mean distance :**

$$Dist_{mean}(Ci,Cj) = |mi - mj|$$

Where, mi is mean of Ci;
mj is mean of Cj;

**4 Average distance :**

$$\text{Dist}_{avg}(Ci,Cj) = \frac{1}{ni\,nj}\sum_{P\in Ci,P'\in Cj}|P-P'|$$

Where , ni,nj are the size of clusters.

**Types of Linkage of clusters:**

1. **Single linkage:** computes the minimum distance between clusters before merging them. If the clustering process is terminated when the distance between nearest clusters exceeds a user-defined threshold, it is called a single-linkage algorithm.
2. **Complete linkage:** computes the maximum distance between clusters before merging them. If the clustering process is terminated when the maximum distance between nearest clusters exceeds a user-defined threshold, it is called a complete-linkage algorithm.

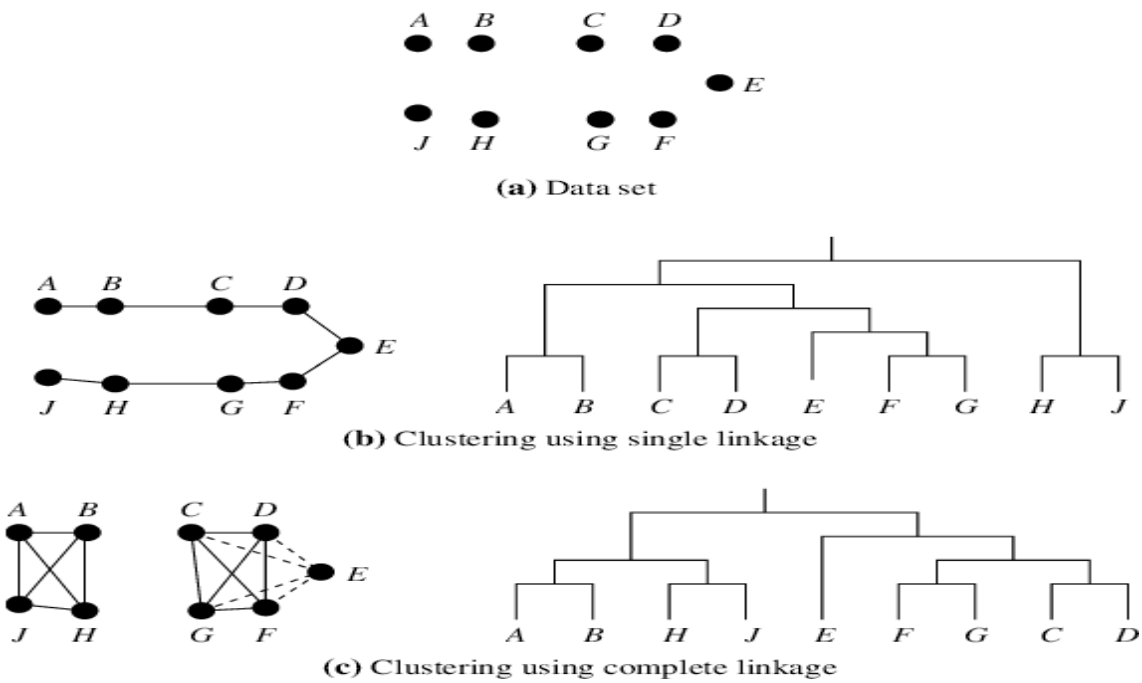

**BIRCH : Multiphase Hierarchical Clustering Using Clustering Feature Trees**

- Balanced Iterative Reducing and Clustering using Hierarchies.
- It is an unsupervised data mining algorithm that performs hierarchical clustering on large datasets.
- Designed to cluster large amount of numeric data.

The BIRCH clustering algorithm consists of two stages:

1. **Building the CF Tree:** BIRCH summarizes large datasets into smaller, dense regions called Clustering Feature (CF) entries. It uses clustering feature (CF) to summarize a cluster and clustering feature tree (CF tree) to represent a cluster hierarchy. Formally, a Clustering Feature entry is defined as an ordered triple (N, LS, SS) where 'N' is the number of data points in the cluster, 'LS' is the linear sum of the data points, and 'SS' is the squared sum of the data points in the cluster. A CF tree is a height-balanced tree with two parameters, branching factor and threshold. The CF-tree is a very compact representation of the dataset because each entry in a leaf node is not a single data point but a subcluster. Every entry in a CF tree contains a pointer to a child node and a CF entry made up of the sum of CF entries in the child nodes. There is a maximum number of entries in each leaf node. This maximum number is called the threshold. The tree size is a function of the threshold. The larger the threshold is, the smaller tree is.
2. **Global Clustering:** Applies an existing clustering algorithm on the leaves of the CF tree. A CF tree is a tree where each leaf node contains a sub-cluster. Every entry in a CF tree contains a pointer to a child node, and a CF entry made up of the sum of CF entries in the child nodes. Optionally, we can refine these clusters.

**CHAMELEON : Multiphase Hierarchical Clustering using Dynamic Modeling**

Chameleon is a hierarchical clustering algorithm that uses dynamic modeling to determine the similarity between pairs of cluster.

**Chameleon uses a two-phase algorithm to find clusters in a data set:**

1. First phase

   Uses a graph partitioning algorithm to cluster data items into small subclusters
2. Second phase

   Uses an algorithm to find the genuine clusters by repeatedly combining these subclusters

Two cluster are merged if their interconnectivity is high and they close together.

* Chameleon uses a K- nearest neighbour graph approach to construct a sparse graph,
Then it uses graph partition algorithm to partition the graph into smaller sub cluster.
Then an agglomerative hierarchical clustering algorithm that iteratively merges sub cluster based on the similarity.

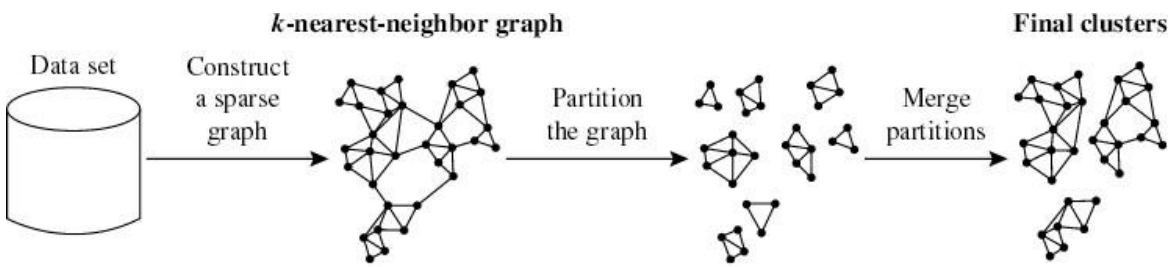


Chameleon: hierarchical clustering based on $k$-nearest neighbors and dynamic modeling. *Source:* Based on Karypis, Han, and Kumar [KHK99].

* Works for arbitrary shaped cluster.

**<u>Probabilistic Hierarchical Clustering:</u>**

Traditional hierarchical clustering assumes that there is no uncertainty or noise in the data being clustered. However, this assumption does not hold for many real-world datasets where there may be missing values, outliers, or measurement errors present in the data. Traditional methods also assume that all features have equal importance, which may not always be true.
Probabilistic hierarchical clustering tries to overcome some of these drawbacks by employing probabilistic model to measure distance between clusters.

**Algorithm:** A probabilistic hierarchical clustering algorithm.

**Input:**

- $D = \{\boldsymbol{o}_1, \ldots, \boldsymbol{o}_n\}$: a data set containing $n$ objects;

**Output:** A hierarchy of clusters.

**Method:**

(1) **create** a cluster for each object $C_i = \{\boldsymbol{o}_i\}$, $1 \le i \le n$;
(2) **for** $i = 1$ to $n$
(3) **find** pair of clusters $C_i$ and $C_j$ such that $C_i, C_j = \arg\max_{i \ne j} \log \frac{P(C_i \cup C_j)}{P(C_i)P(C_j)}$;
(4) **if** $\log \frac{P(C_i \cup C_j)}{P(C_i)P(C_j)} > 0$ then merge $C_i$ and $C_j$;
(5) **else** stop;

**Advantages:**

- Handles complex data containing noise or missing values.
- More flexible than algorithmic methods.

**Disadvantages:**

- Computationally expensive
- sensitivity to initialization parameters.
- assumption of Gaussian distributions within clusters
- requires domain knowledge and expertise in statistical modeling

**Density-Based Methods**

**DBSCAN: Density-Based Clustering Based on Connected Regions with High Density**

The DBSCAN algorithm is based on this intuitive notion of "clusters" and "noise". The key idea is that for each point of a cluster, the neighborhood of a given radius has to contain at least a minimum number of points.

**Parameters Required For DBSCAN Algorithm**

1. **eps**: It defines the neighborhood around a data point i.e. if the distance between two points is lower or equal to 'eps' then they are considered neighbors. If the eps value is chosen too small then a large part of the data will be considered as an outlier. If it is chosen very large then the clusters will merge and the majority of the data points will be in the same clusters. One way to find the eps value is based on the ***k-distance graph***.
2. **MinPts**: Minimum number of neighbors (data points) within eps radius. The larger the dataset, the larger value of MinPts must be chosen. As a general rule, the minimum MinPts can be derived from the number of dimensions D in the dataset as, MinPts >= D+1. The minimum value of MinPts must be chosen at least 3.

In this algorithm, we have 3 types of data points.

**Core Point:** A point is a core point if it has more than MinPts points within eps.

**Border Point:** A point which has fewer than MinPts within eps but it is in the neighborhood of a core point.

**Noise or outlier:** A point which is not a core point or border point.

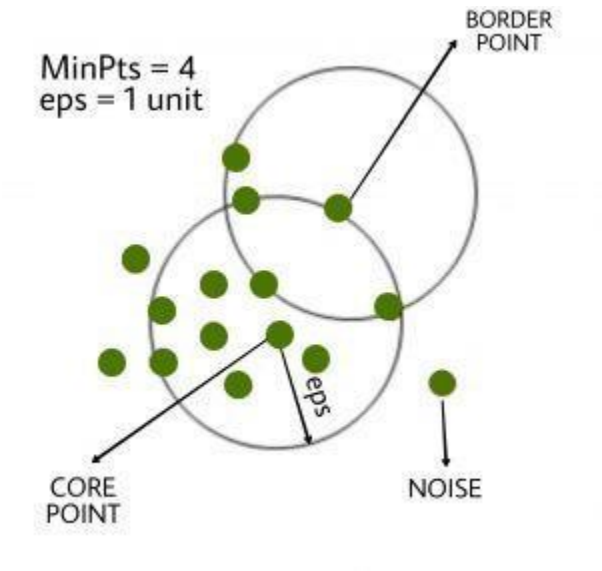


**Steps Used In DBSCAN Algorithm**

1. Find all the neighbor points within eps and identify the core points or visited with more than MinPts neighbors.
2. For each core point if it is not already assigned to a cluster, create a new cluster.
3. Find recursively all its density-connected points and assign them to the same cluster as the core point.
   A point *a* and *b* are said to be density connected if there exists a point *c* which has a sufficient number of points in its neighbors and both points *a* and *b* are within the *eps distance*. This is a chaining process. So, if *b* is a neighbor of *c*, *c* is a neighbor of *d*, and *d* is a neighbor of *e*, which in turn is neighbor of *a* implying that *b* is a neighbor of *a*.
4. Iterate through the remaining unvisited points in the dataset. Those points that do not belong to any cluster are noise.

**DENCLUE:**

DENsity CLUstering. The DENCLUE algorithm employs a cluster model based on kernel density estimation. A cluster is defined by a local maximum of the estimated density function. Observations going to the same local maximum are put into the same cluster.

Clearly, DENCLUE doesn't work on data with uniform distribution. In high dimensional space, the data always look like uniformly distributed because of the curse of dimensionality. Therefore, DENCLUDE doesn't work well on high-dimensional data in general.

**Grid-Based Methods**

The grid-based clustering approach uses a grid data structure. It limits the object space into a finite number of cells that form a grid structure on which all of the operations for clustering are performed. The main advantage of the approach is its fast-processing time.

**Statistical Information Grid (STING):**

A STING is a grid-based clustering technique. It uses a multidimensional grid data structure that quantifies space into a finite number of cells. Instead of focusing on data points, it focuses on the value space surrounding the data points.

In STING, the spatial area is divided into rectangular cells and several levels of cells at different resolution levels. High-level cells are divided into several low-level cells.

In STING Statistical Information about attributes in each cell, such as mean, maximum, and minimum values, are precomputed and stored as statistical parameters. These statistical parameters are useful for query processing and other data analysis tasks. The statistical parameter of higher-level cells can easily be computed from the parameters of the lower-level cells.

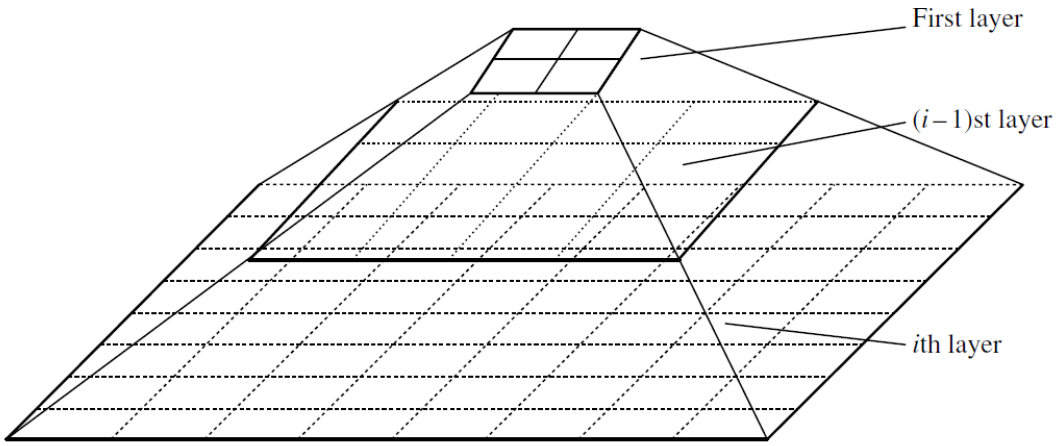


Hierarchical structure for STING clustering.

**Working of STING:**

**Step 1:** Determine a layer, to begin with.
**Step 2:** For each cell of this layer, it calculates the confidence interval or estimated range of probability that this is cell is relevant to the query.
**Step 3:** From the interval calculate above, it labels the cell as relevant or not relevant.
**Step 4:** If this layer is the bottom layer, go to point 6, otherwise, go to point 5.
**Step 5:** It goes down the hierarchy structure by one level. Go to point 2 for those cells that form the relevant cell of the high-level layer.
**Step 6:** If the specification of the query is met, go to point 8, otherwise go to point 7.

**Step 7:** Retrieve those data that fall into the relevant cells and do further processing. Return the result that meets the requirement of the query. Go to point 9.
**Step 8:** Find the regions of relevant cells. Return those regions that meet the requirement of the query. Go to point 9.
**Step 9:** Stop or terminate.

**Advantages:**

- Grid-based computing is query-independent because the statistics stored in each cell represent a summary of the data in the grid cells and are query-independent.
- The grid structure facilitates parallel processing and incremental updates.

**Disadvantage:**

- The main disadvantage of Sting (Statistics Grid). As we know, all cluster boundaries are either horizontal or vertical, so no diagonal boundaries are detected.

**CLIQUE: An Apriori-like Subspace Clustering Method**

**CLIQUE** (CLustering In QUEst) is a simple grid-based method for finding density based clusters in subspaces.
It is based on automatically identifying the subspaces of high dimensional data space that allow better clustering than original space.
It uses a density threshold to identify *dense* cells and *sparse* ones.
A cell is dense if the number of objects mapped to it exceeds the density threshold.
CLIQUE Algorithm is very scalable with respect to the value of the records, and a number of dimensions in the dataset because it is grid-based and uses the Apriori Property effectively. Apriori Approach Stated that If an X dimensional unit is dense then all its projections in X-1 dimensional space are also dense.

This means that dense regions in a given subspace must produce dense regions when projected to a low-dimensional subspace.

CLIQUE restricts its search for high-dimensional dense cells to the intersection of dense cells in the subspace because CLIQUE uses apriori properties.

**(a) Working of CLIQUE Algorithm:**

The CLIQUE algorithm first divides the data space into grids. It is done by dividing each dimension into equal intervals called units. After that, it identifies dense units. A unit is dense if the data points in this are exceeding the threshold value.

Once the algorithm finds dense cells along one dimension, the algorithm tries to find dense cells along two dimensions, and it works until all dense cells along the entire dimension are found.

After finding all dense cells in all dimensions, the algorithm proceeds to find the largest set ("cluster") of connected dense cells. Finally, the CLIQUE algorithm generates a minimal description of the cluster. Clusters are then generated from all dense subspaces using the apriori approach.

**Advantage:**

- CLIQUE is a subspace clustering algorithm that outperforms K-means, DBSCAN, and Farthest First in both execution time and accuracy.
- CLIQUE can find clusters of any shape and is able to find any number of clusters in any number of dimensions, where the number is not predetermined by a parameter.
- One of the simplest methods, and interpretability of results.

**Disadvantage:**

- The main disadvantage of CLIQUE Algorithm is that if the size of the cell is unsuitable for a set of very high values, then too much of the estimation will take place and the correct cluster will be unable to find.

## Evaluation of Clustering

Cluster evaluation assesses the feasibility of clustering analysis on a data set and the quality of the results generated by a clustering method.

**The major tasks of clustering evaluation include the following:**

**Assessing clustering tendency:** is the process of determining if a dataset has clusters. This helps answer the question, "Are there clusters in this dataset based on our research question?" . The answer to this question determines whether cluster analysis is necessary.

**Measures to assess clustering tendency:**

- **Hopkins statistic:** Measures the probability that a dataset is generated by a uniform data distribution, or tests the spatial randomness of the data.

**Determining the number of clusters in a data set:** A few algorithms, such as k-means, require the number of clusters in a data set as the parameter. Moreover, the number of clusters can be regarded as an interesting and important summary statistic of a data set. Therefore, it is desirable to estimate this number even before a clustering algorithm is used to derive detailed clusters.

**Measures to assess determining number of clusters:**

- **Elbow method:** To determine the optimal number of clusters, we have to select the value of k at the "elbow" i.e., the point after which the distortion/inertia starts decreasing in a linear fashion. Thus for the given data, we conclude that the optimal number of clusters for the data is 4.

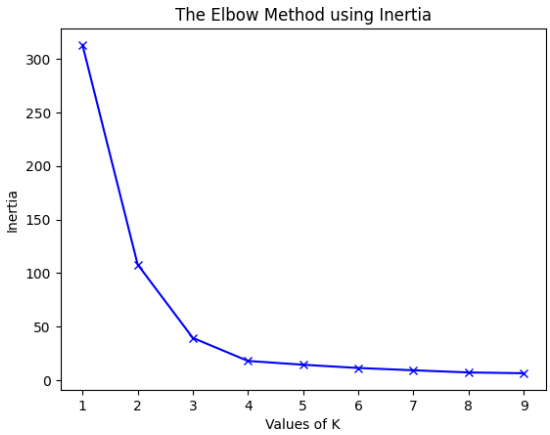


**Measuring clustering quality:** After applying a clustering method on a data set, we want to assess how good the resulting clusters are. A number of measures can be used. Some methods measure how well the clusters fit the data set, while others measure how well the clusters match the ground truth, if such truth is available. There are also measures that score clustering and thus can compare two sets of clustering results on the same data set.

## Methods of measuring clustering quality:

Depending on the availability of ground truth(information that is already known by directed observation or measurement), the methods can be classified as Extrinsic/supervised ( ground truth available) and Intrinsic/unsupervised (ground truth not available) methods.

Extrinsic methods:

**Cluster homogeneity:** The similarity between the clusters can be expressed in terms of a distance function, which is represented by d(i, j).

**Cluster completeness:** Cluster completeness is the essential parameter for good clustering, if any two data objects are having similar characteristics then they are assigned to the same category of the cluster according to ground truth. Cluster completeness is high if the objects are of the same category.

**Rag bag:** In some situations, there can be a few categories in which the objects of those categories cannot be merged with other objects. Then the quality of those cluster categories is measured by the Rag Bag method. According to the rag bag method, we should put the heterogeneous object into a rag bag category

**Small cluster preservation:**

If a small category of clustering is further split into small pieces, then those small pieces of cluster become noise to the entire clustering and thus it becomes difficult to identify that small category from the clustering. The small cluster preservation criterion states that are splitting a small category into pieces is not advisable and it further decreases the quality of clusters as the pieces of clusters are distinctive.

**Intrinsic Methods**

intrinsic methods evaluate a clustering by examining how well the clusters are separated and how compact the clusters are. Many intrinsic methods have the advantage of a similarity metric between objects in the
data set.

**Silhouette coefficient:** The value of the silhouette coefficient is between -1 and 1. Positive value nearing 1 indicates a good cluster.